A. Remove Suspension unit from the car.

B. Where ① is shown cut off the OE suspension shaft from the Superstrut Knuckle joint, use suitable cutting tool and do NOT damage the Cast Knuckle joint.

C. File down any rough edges.

D. This will now expose a hole recess in the superstrut knuckle arm.

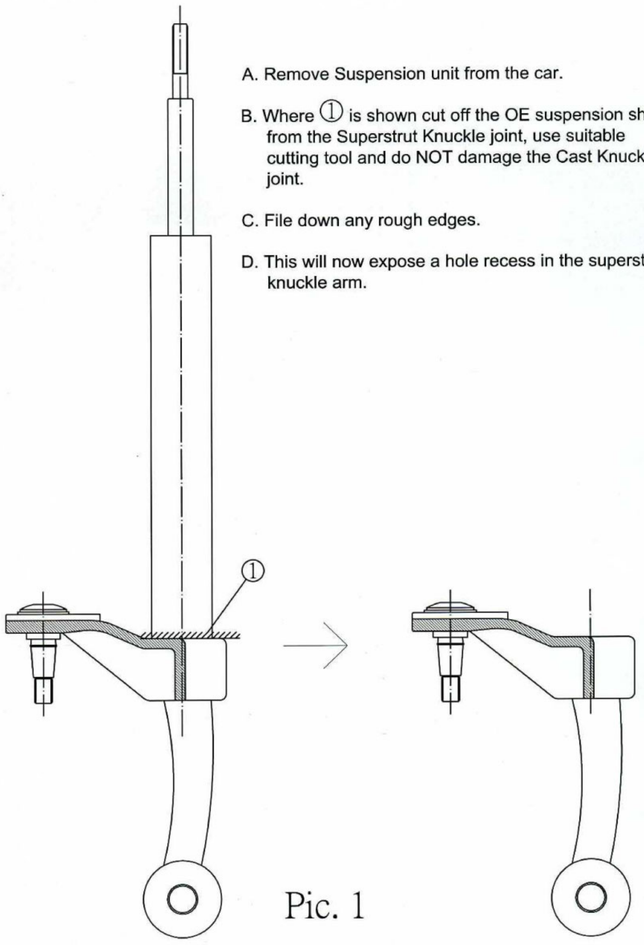

Pic. 1

Pic. 2

A. Offer up the BC BR Damper insert into the superstrut Knuckle Hole.

B. Line up the link bracket on the BC BR insert to be inline with the point as shown under ②.

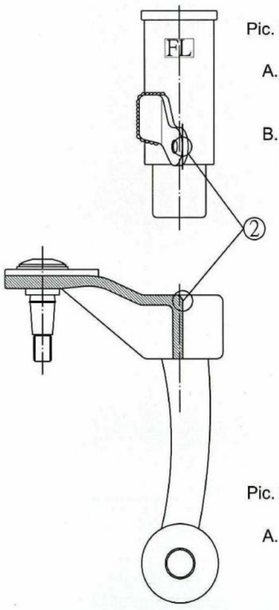

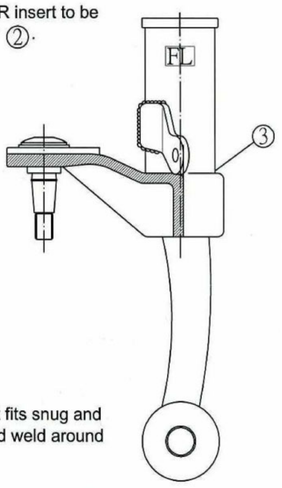

Pic. 3

A. Make sure the BC BR coilover insert fits snug and level into the Superstrut Knuckle and weld around at the point ③.

Pic. 2

Pic. 3

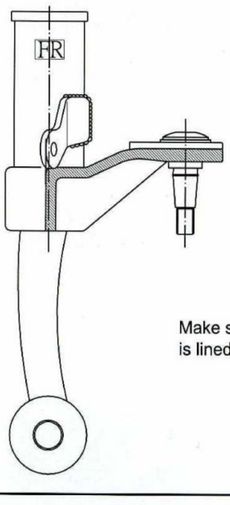

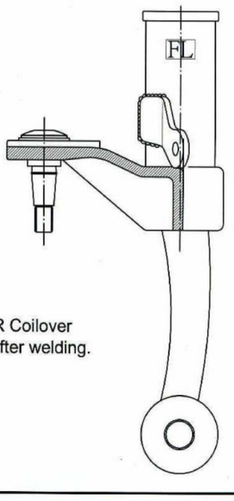

Make sure the link bracket on the BC BR Coilover is lined up with the point shown on ④ after welding.

Pic. 4